BULB TYPE GENERATORS

Bulb Generator

VA TECH is the global leader in bulb-type generators.
More than 160 designed units in operation worldwide.

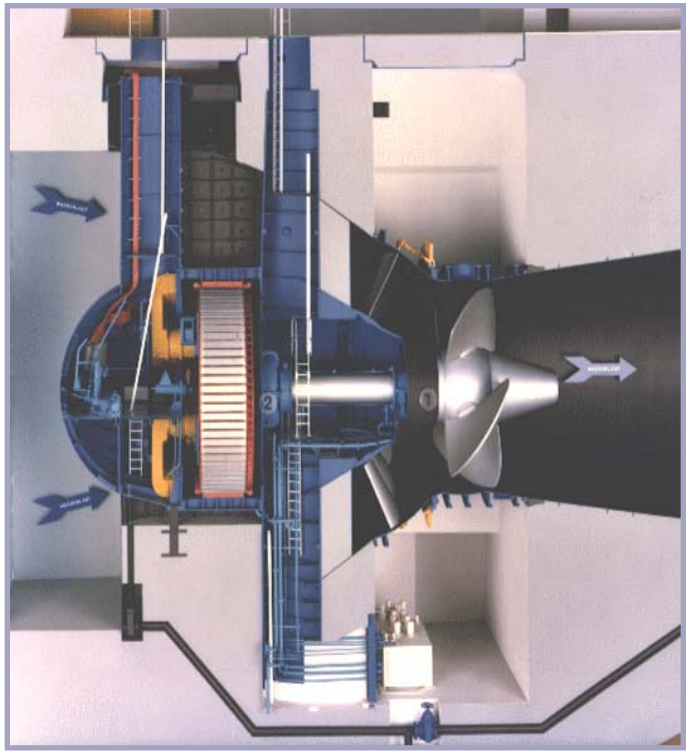

Selected References:

Ma Jin Tang (China)	3 x 20.0 MVA	75.0 rpm
Altenwörth (Austria)	9 x 45.0 MVA	103.0 rpm
Racine (USA)	2 x 25.0 MVA	62.0 rpm
Pak Mun (Thailand)	4 x 36.0 MVA	100.0 rpm
Ybbs/Persenbeug	1 x 46.0 MVA	75.0 rpm
Freudenau (Austria)	6 x 32.0 MVA	65.2 rpm
Fei Lai Xia (China)	4 x 39.0 MVA	83.3 rpm
Da Yuan Du (China)	4 x 33.5 MVA	65.2 rpm

(with a bulb diameter of 9 m, the world's largest bulb-type generators)

Bulb Generator - Design

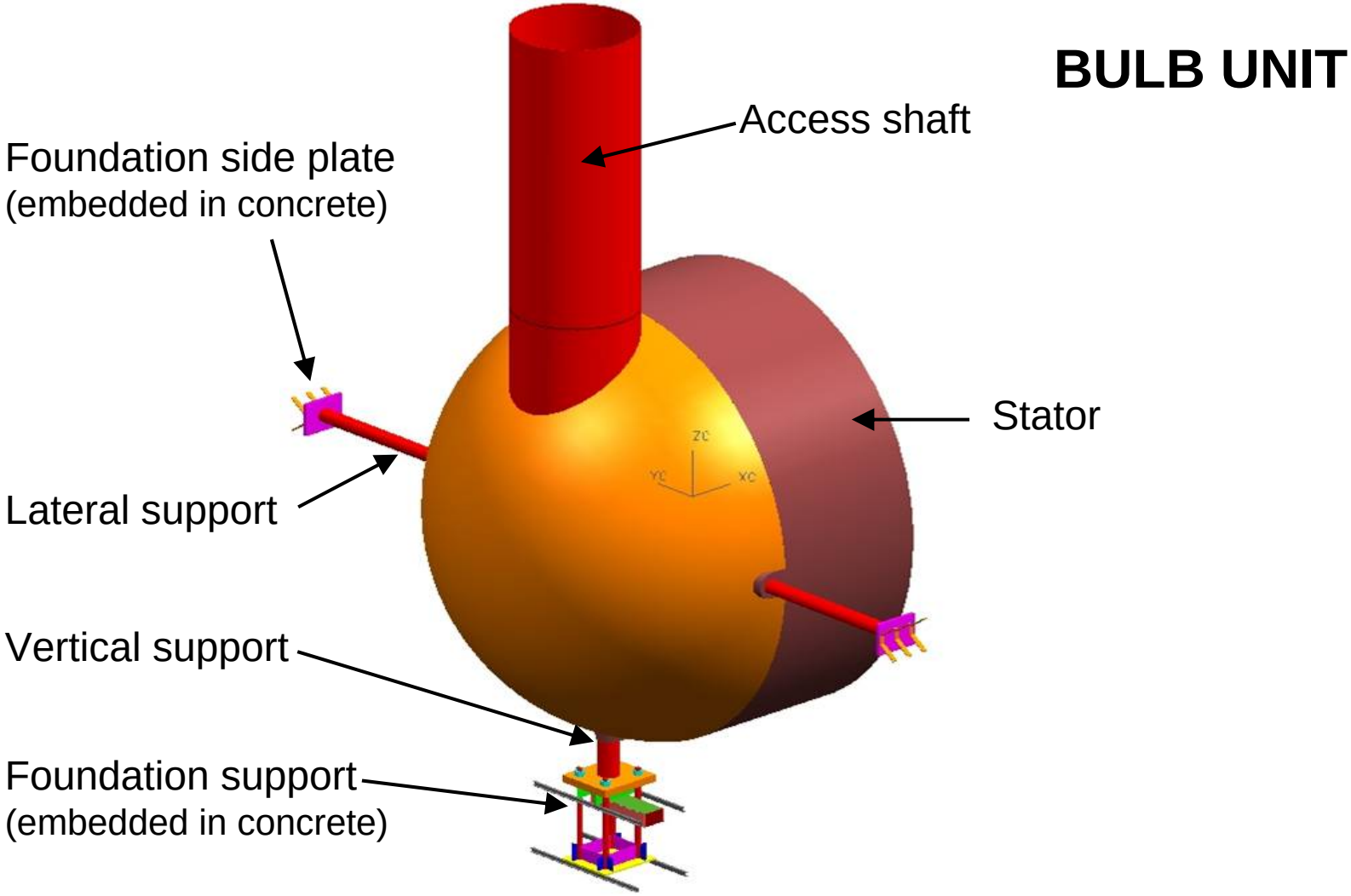

Bulb Generator - Design

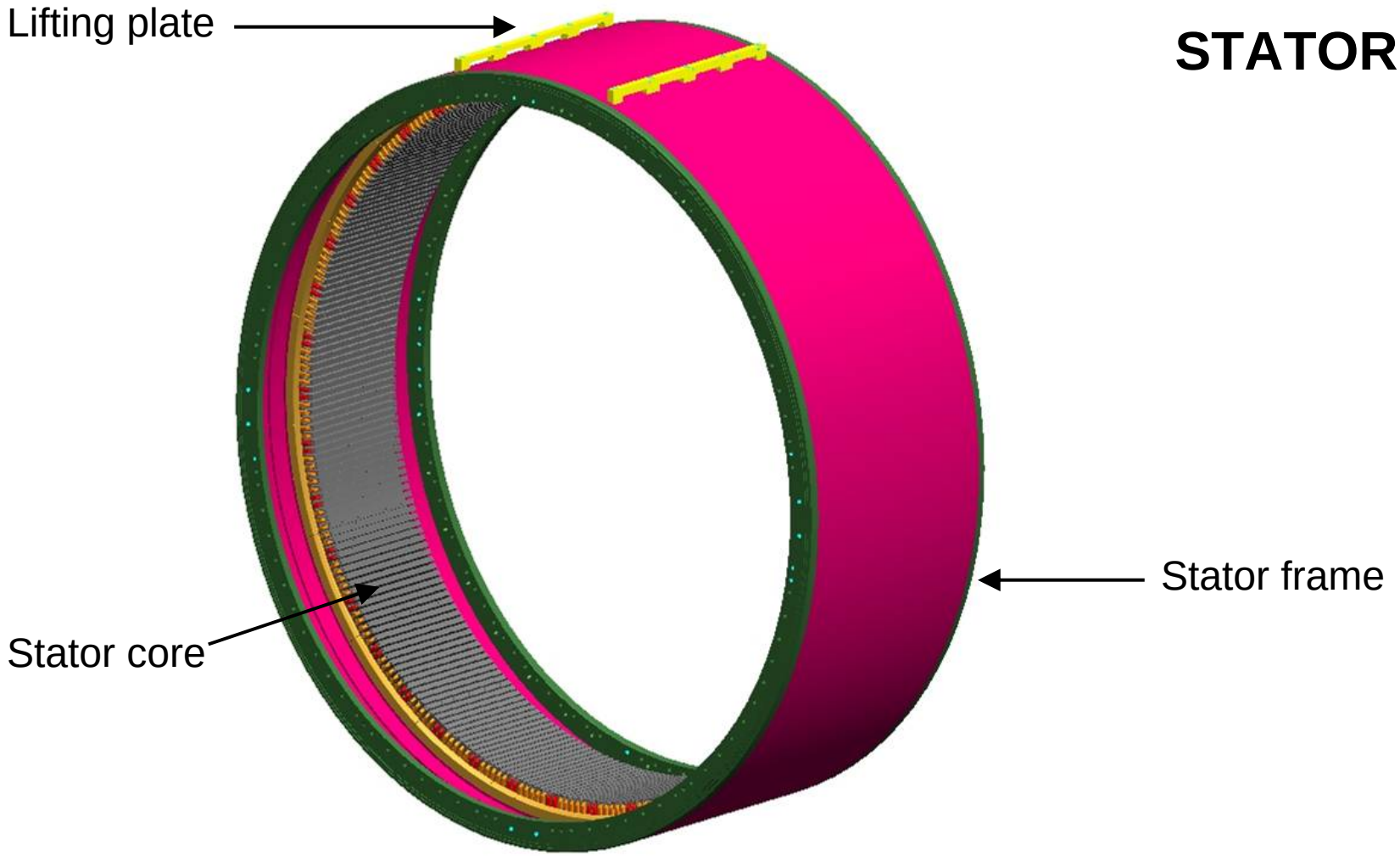

Bulb Generator - Design

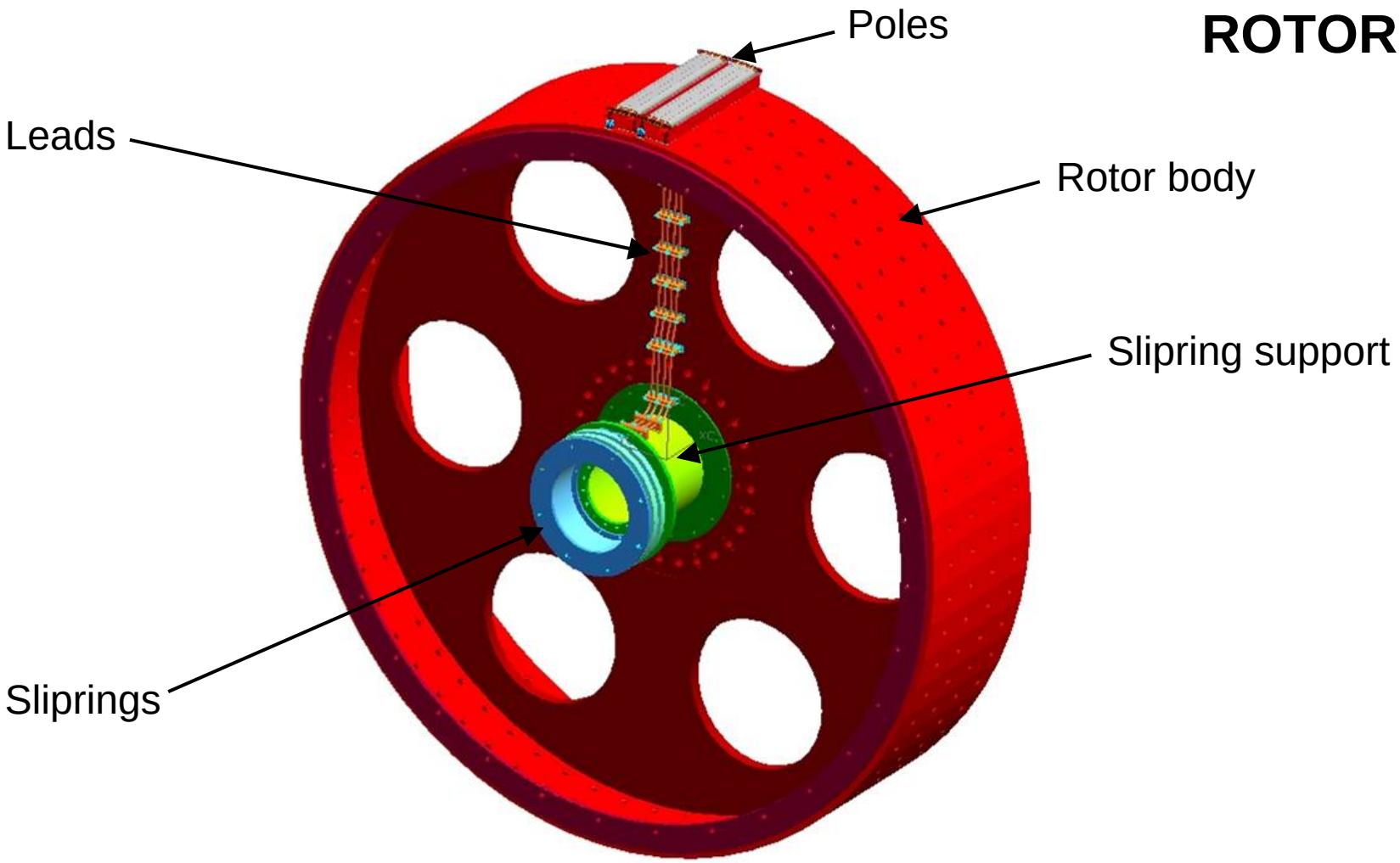

Bulb Generator - Design

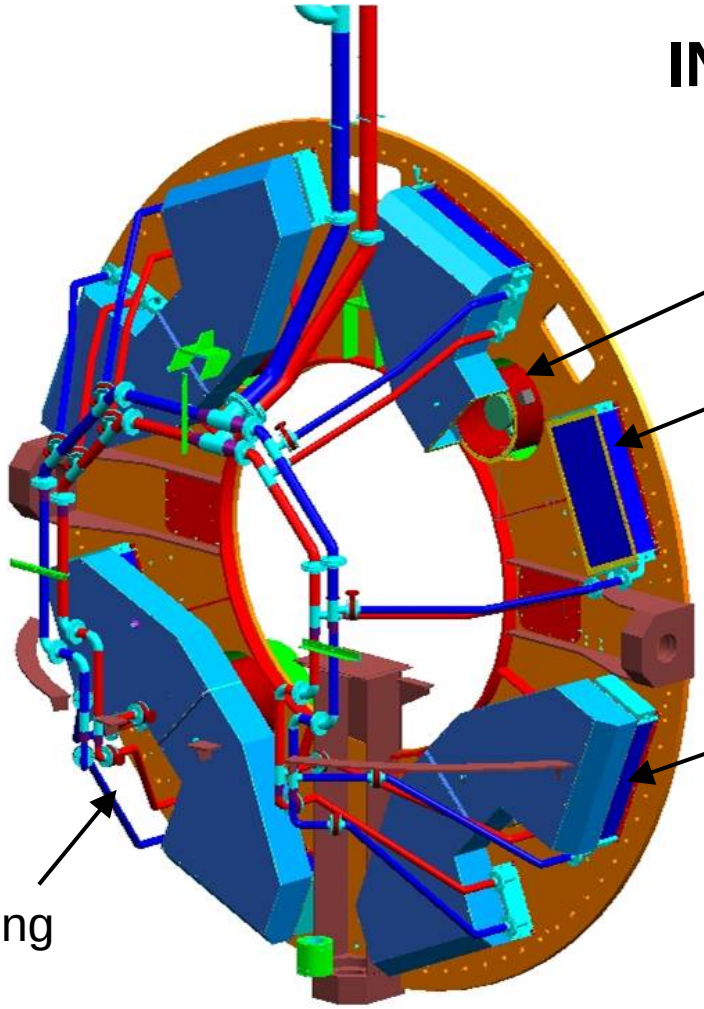

Bulb Generator - Design

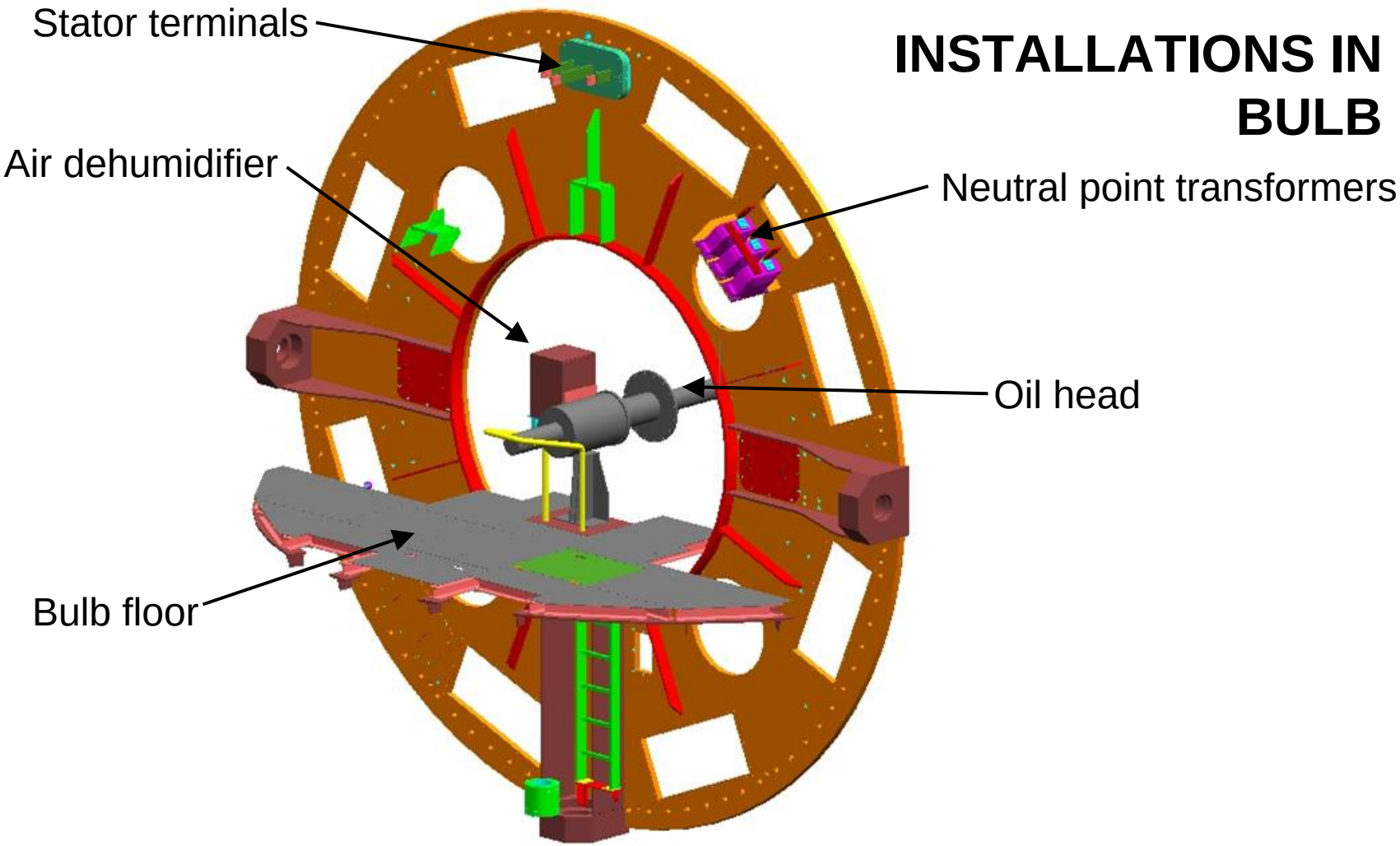

Bulb Generator - Design

LOCATION OF AUXILIARY PLANTS

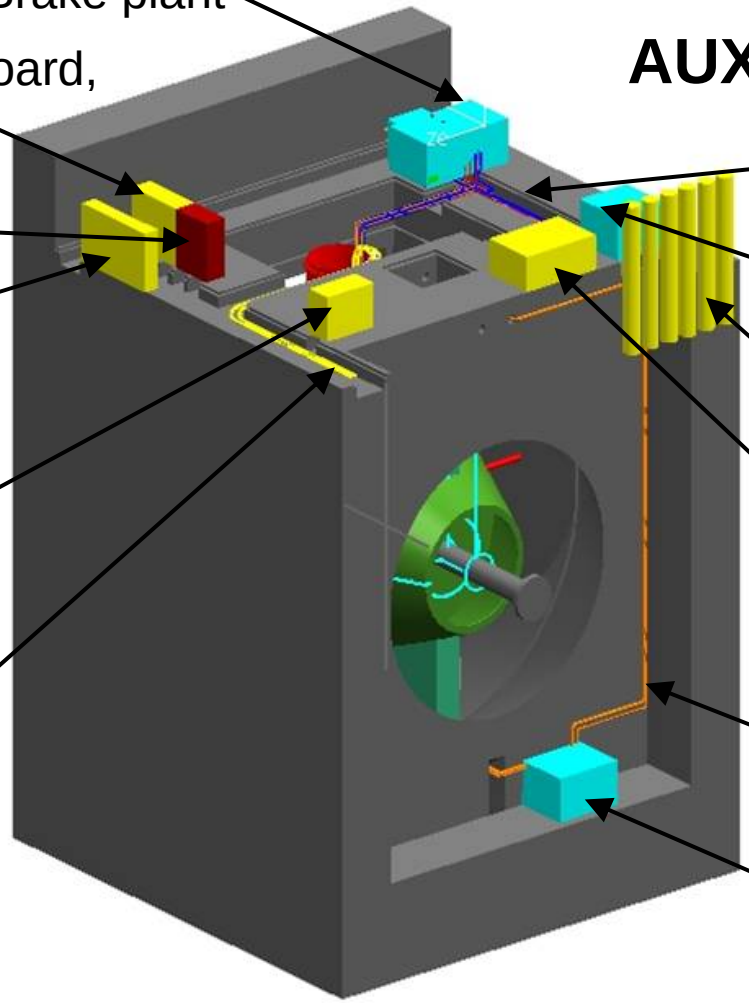

Bulb Generator - Design

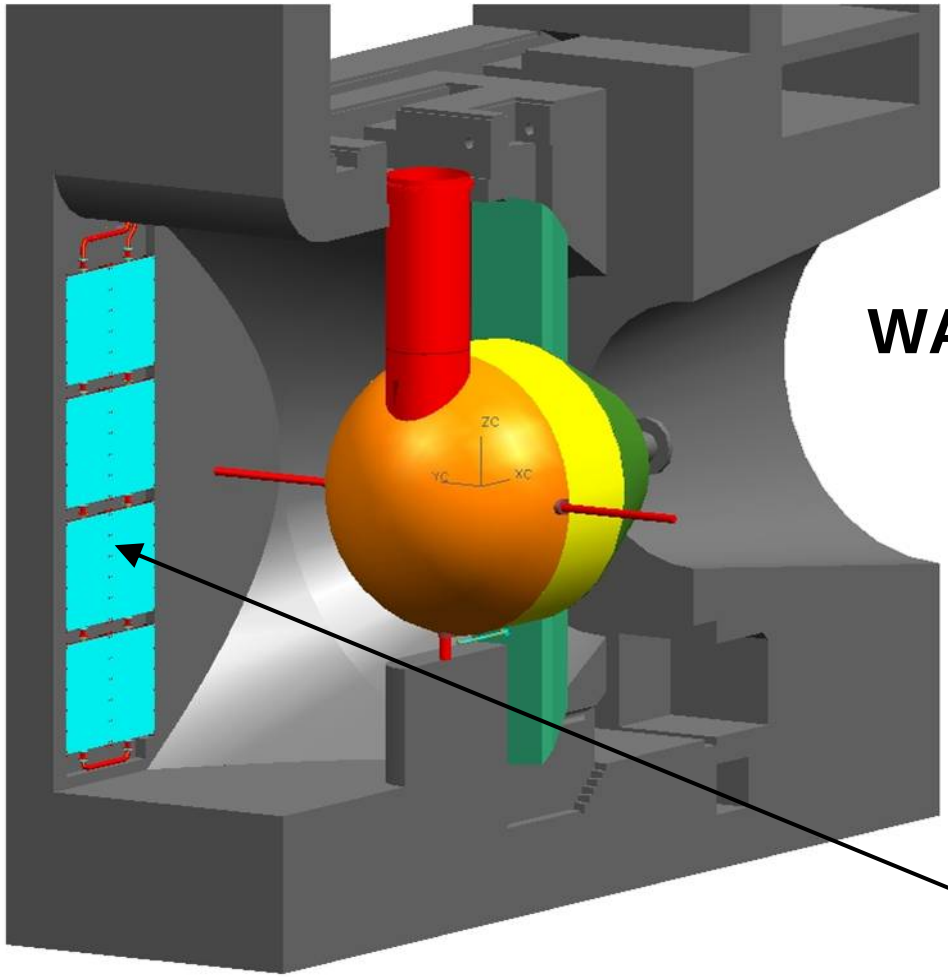

WATER-WATER-COOLER INSTALLATION

Water-water-cooler

Bulb Generator - Design

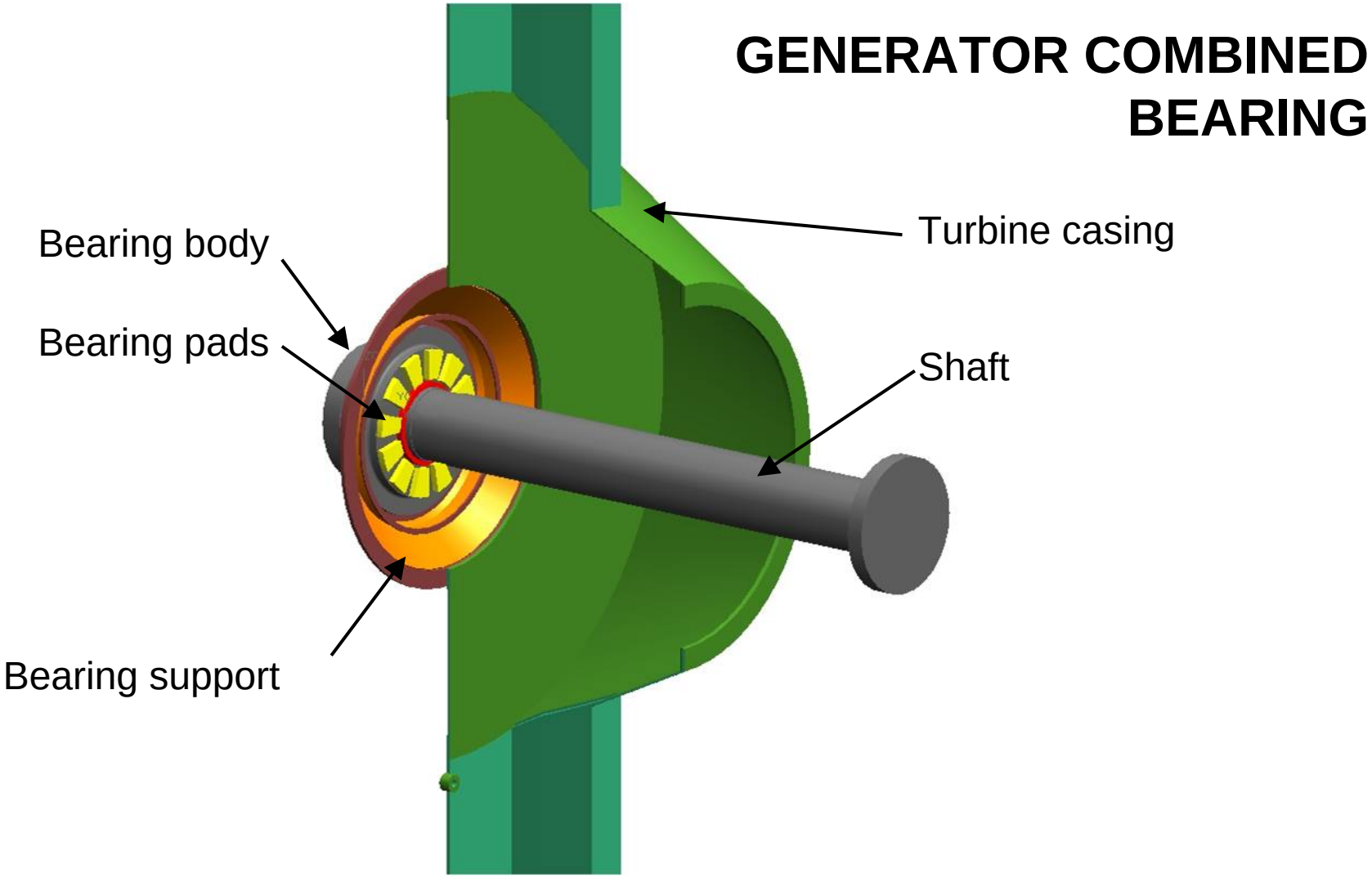

Bulb 2000

A NEW DESIGN FOR BULB TYPE GENERATORS

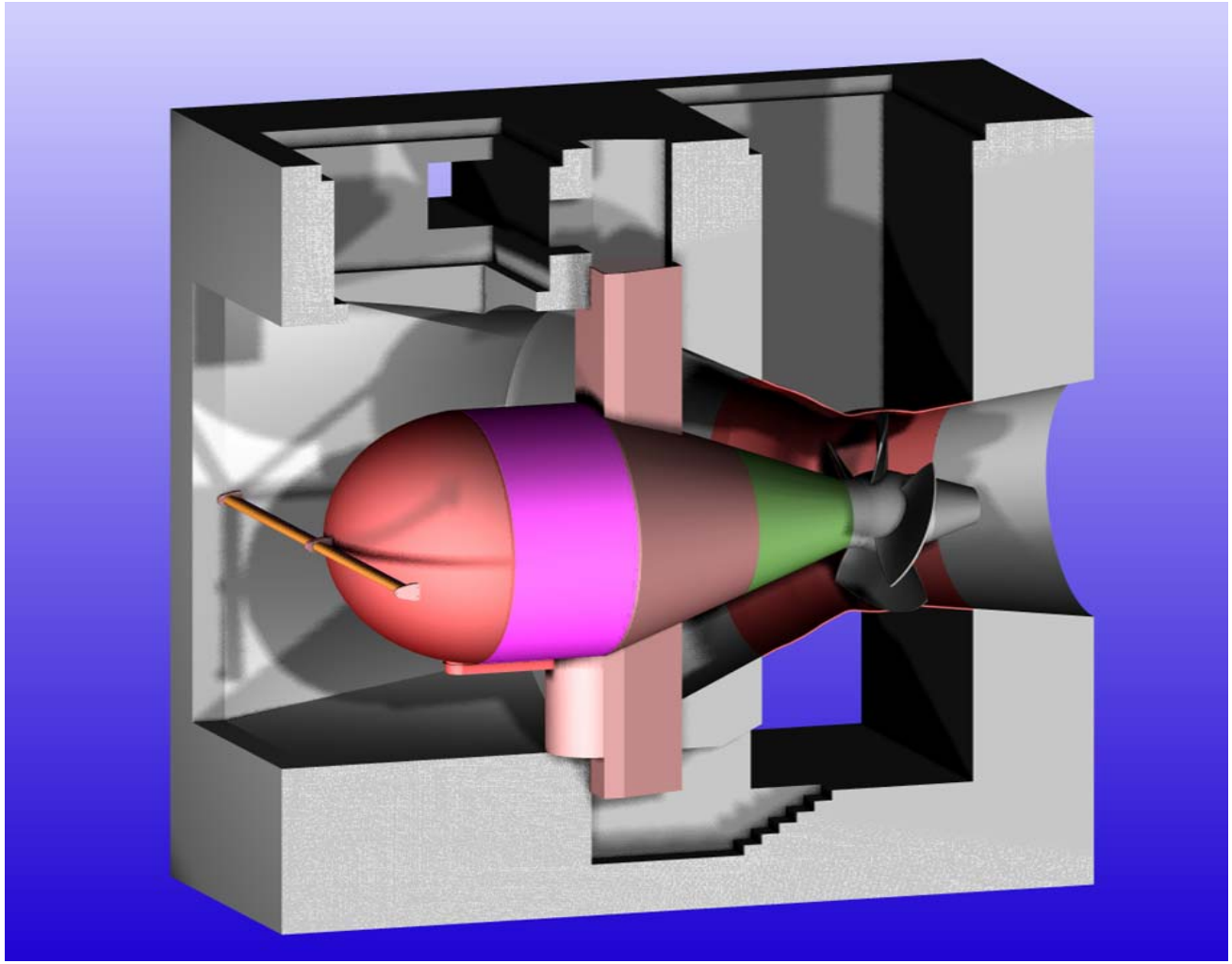

Bulb 2000

WHY A NEW DESIGN?

- **Economic competition between**
  - ⇨ **direct driven and**
  - ⇨ **step up gear driven bulb generators**

  at ratings up to 15 MVA

- **Gear driven**
  - ⇨ **"Arkansas 13“**

- **Conventional bulbs**
  - ⇨ **standard "Greifenstein"**
  - ⇨ **fin cooling "Gmunden“**

- **New design**
  - ⇨ **"Bulb 2000"**

Bulb 2000

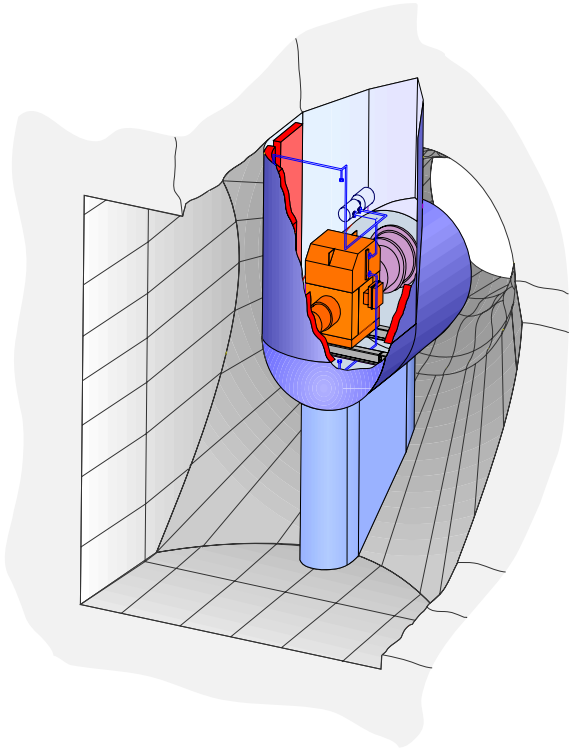

Gear driven design "Arkansas 13" 10.57 MVA

Turbine speed	**77.07 rpm**
Step up gear	
Generator speed	**900 rpm**
Runaway speed	**2,645 rpm**
(not standardised rotor)	

Efficiency generator + gear = 96.4 %

Cooling through surface coolers integrated in the stream liners

Bulb 2000

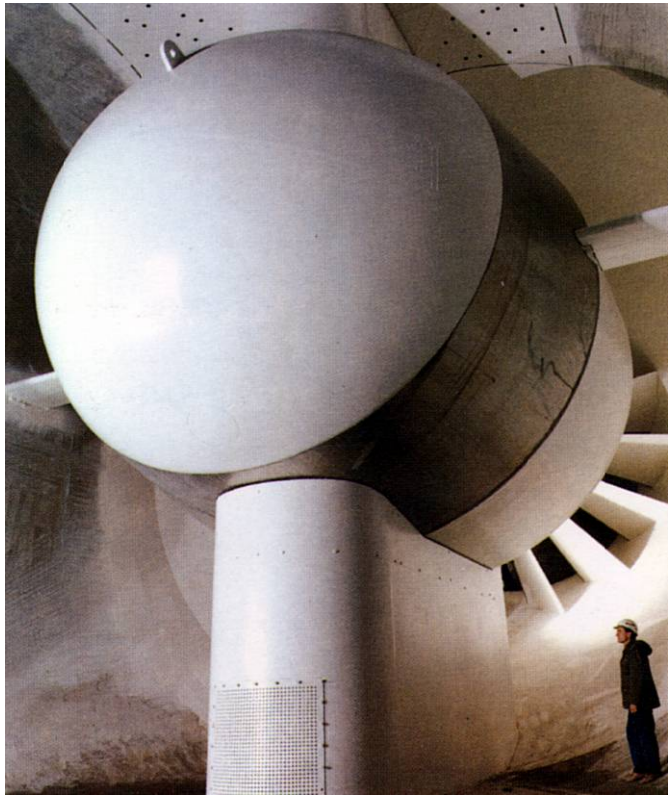

Standard design "Greifenstein" 38 MVA

Rated speed	**93.75 rpm**
Runaway speed	**273 rpm**
Efficiency	**97.91 %**

Cooling through double shell cooler integrated in the bulb nose or coolers in the stream liners between the access shafts

Bulb 2000

Standard

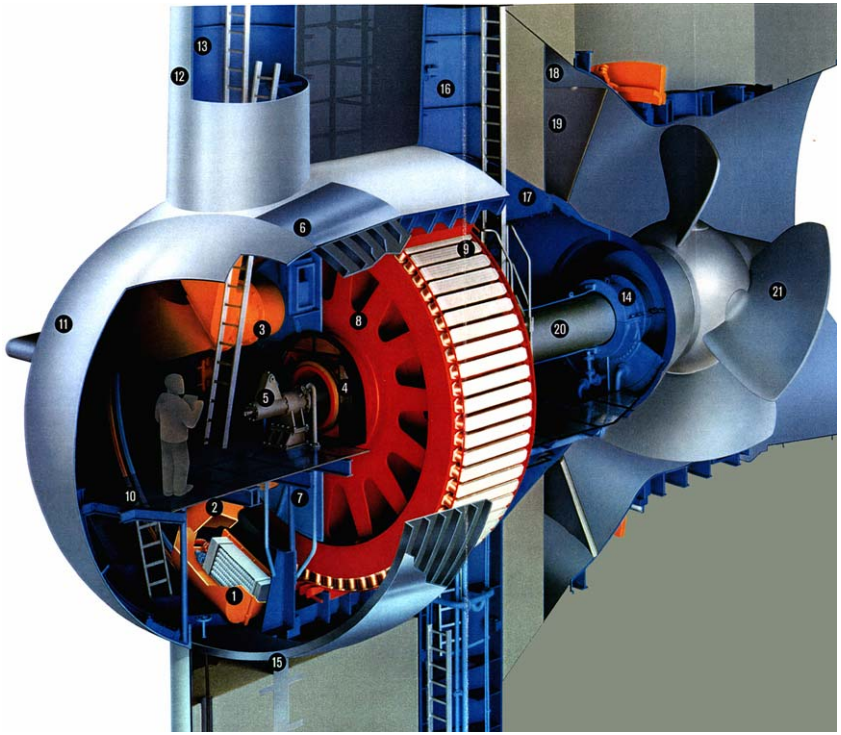

New (Bulb2000)

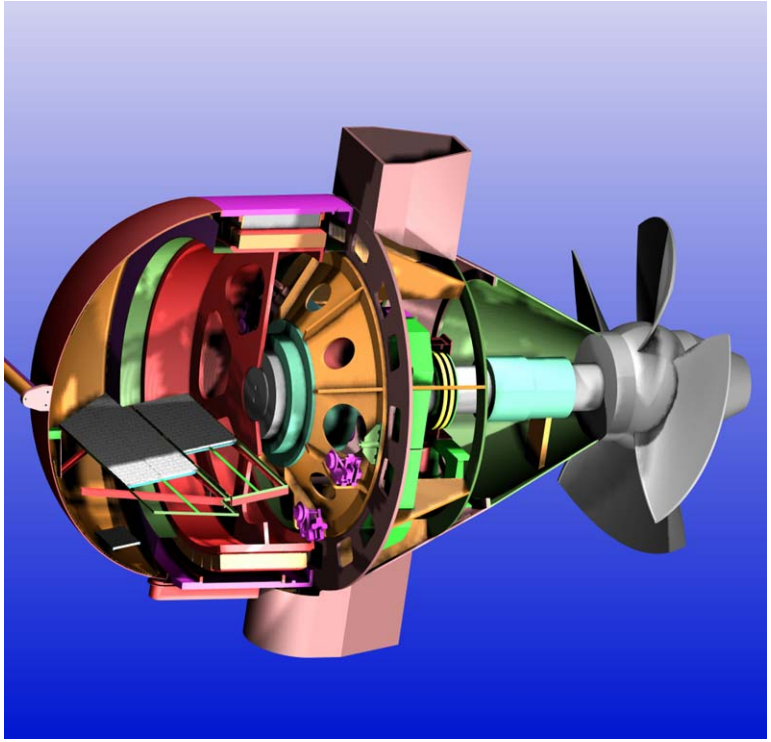

Bulb 2000

Power cabling

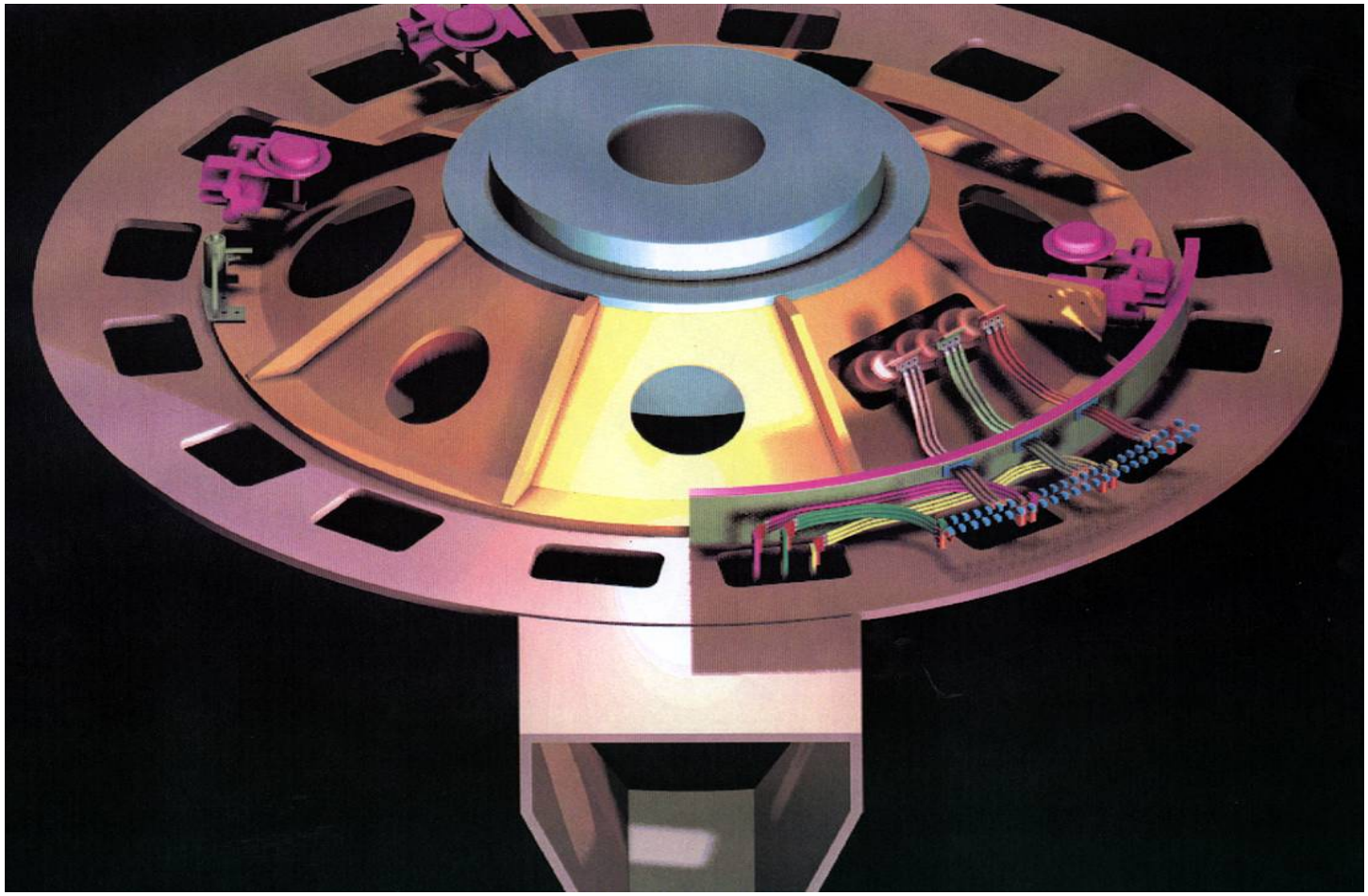

Bulb 2000

Cooling System (as built)

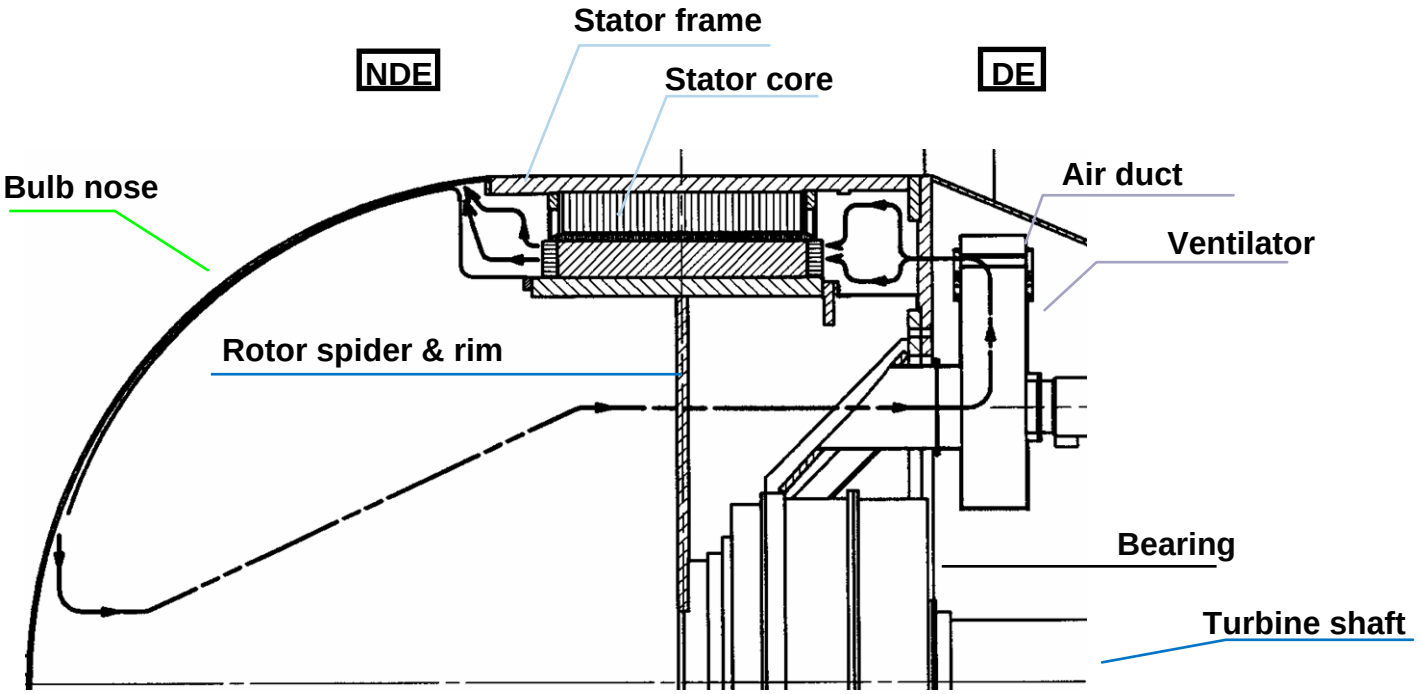

Air flow through:
Bulb nose area - opening turbine stay ring - radial Ventilator - air ducts - small openings in turbine stayring - DE endwinding - air gap and pole gap - NDE endwinding - cooling duct inside bulb nose -bulb nose area

Bulb 2000

Comparison of size: Bulb2000 - Gear driven generator Unit

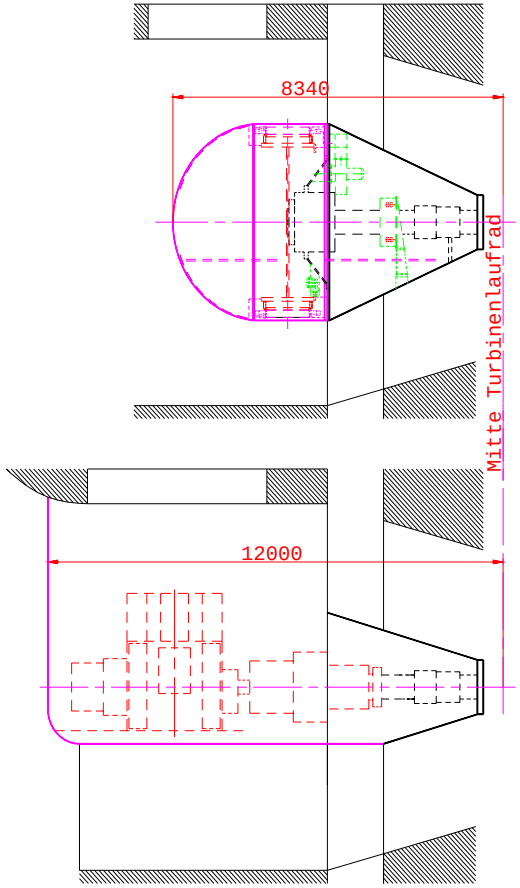

"Deutschfeistritz" Comparison of length

	Bulb-nose	Generator (mm) Stator	Generator (mm) Sum	Turbine (mm)	Total (mm)
BULB 2000	2,050	1,850	3,900	4,440	8,340
Conventional bulb generator					
with intermediate cooling water circuit and					
aluminium-Cooler	2,050	1,950	4,000	4,440	8,440
cooling jacket	2,250	1,950	4,200	4,440	8,640
with FIN-Cooling	2,610	1,950	4,560	4,440	9,000
Gear driven generator					12,000

Bulb 2000

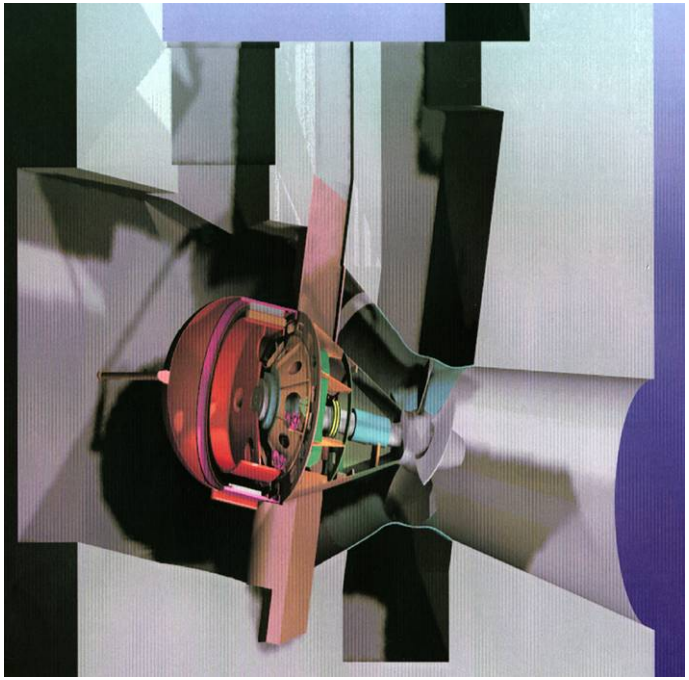

New design BULB 2000

- ❑ **No gear**
- ❑ **Very high efficiency**
- ❑ **Smaller power house dimensions**
- ❑ **Simple cooling design**
- ❑ **One access shaft only (turbine side)**
- ❑ **Unusual high cooling air temperature, but normal winding and core temperature**
- ❑ **Cheaper**
- ❑ **References**
  Deutschfeistritz / STEWEAG
  Lambach / ENERGIE AG

Bulb 2000

DIFFERENCES TO CONVENTIONAL BULB GENERATOR DESIGN

- Sliprings and motor driven fans on driving side
- Oil head near turbine bearing - radial oil supply
- Generator with high efficiency
  (appr. 98.5 %, for comparison Gmunden: 96.4 %)
- Heat dissipation only through casing and bulb nose (without fins)
- All supply lines (oil, water, power, control) arranged in turbine side access shaft
- Cold air appr. 60°C
- Warm air appr. 85°C
- Temperatures below admissible values according IEC class B

Bulb 2000

ACHIEVMENT OF COST REDUCTION

- ❑ No generator access shaft
- ❑ No air/water heat exchanger
- ❑ No intermediate cooling circuit (or bulb nose with fins)
  - ⇨ No conical part of bulb
- ❑ No vertical support
- ❑ No auxiliary installations and dividing wall in bulb
- ❑ No cooling water pumps
- ❑ Stator core with abutting frame
- ❑ Simple rotor design

Bulb Generator References

Generators with Large Bulb Diameter

Year	Plant	Nos	Diameter (mm)
1977	Racine / USA	2	8,640
1981	Greifenstein / Austria	9	8,100
1992	Ybbs (unit 7) / Austria	1	8,750
1993	Freudenau / Austria	6	8,750
1993	Belleville / USA	2	8,750
1996	Dayuandu / China	4	9,000
1997	Feilaixia / China	4	8,600

Total 28 units 966 MVA

Bulb Generator References

Generators with Big Core Length

Year	Plant	Nos	Length (mm)
1973	Altenwörth / Austria	9	2,550
1975	Asele / Schweden	1	1,550
1977	Racine / USA	2	1,500
1981	Vajukoski / Finland	1	1,500
1987	Kokkosniva / Finland	1	1,580
1990	Kurkiaska / Finland	1	1,580
1991	Pak Mun / Thailand	4	1,600
1992	Ybbs (unit 7)	1	1,500
1992	Jing Nan / China	2	1,500
Total	22 units 838 MVA		

Bulb Generator References

Generators with Heavy Rotor Weight

Year	Plant	Nos	Weight (tons)
1973	Altenwörth / Austria	9	151
1977	Racine / USA	2	158
1981	Greifenstein / Austria	9	143
1987	Kokkosniva / Finland	1	130
1988	Oberaudorf / Germany	2	129
1990	Kurkiaska / Finland	1	141
1991	Pak Mun / Thailand	4	137
1993	Freudenau / Austria	6	146

Total 34 units 1,268 MVA

Bulb Reference

KARKAMIS / Turkey

Installed capacity: 209 MVA, Contract: 1996

Scope of Performance:

- **LEADER OF CONSORTIUM**
- **OVERALL RESPONSIBILITY for**
  - **Project Financing**
  - **Civil Works & Hydraulic Steel Structure**
  - **Electrical Equipment**
  - **Mechanical Equipment**

COMPLETE TURNKEY PROJECT

Supplies:

- **BULB TYPE GENERATORS**
- **STEP UP TRANSFORMERS**
- **HV SWITCHYARD**
- **EXCITATION-, PROTECTION- & CONTROL SYSTEM**
- **BALANCE OF PLANT EQUIPMENT**
- **Installation, Commissioning and Commissioning Coordination**

Bulb Reference

KARKAMIS / Turkey

The power plant is located on the Euphrates River in the southeastern part of Turkey, approximately 80 km from Gaziantep, the district capital, near the Syrian border.

A consortium under the lead of VA TECH HYDRO got the contract to built this project on a Turnkey basis under the guidelines of the bilateral protocol between Turkey and Austria. The power plant commenced operation in December 1999 after 43 months of construction work, more than 1 month ahead of schedule. The project consists of a powerhouse, a spillway system with gates and two earthfill dams.

The scope of supply of VA TECH HYDRO included six Bulb generators, three Main Transformers, Protection- Excitation and Control Systems, Generator Switchgear, 154 kV Switchyard as well as other balance of plant equipment.

Technical data:
Output: 34.8 MVA
Voltage: 9.0 kV
Speed: 88.2 rpm
Stator diameter: 7,500 mm

Bulb Reference

YBBS / Austria

Ybbs Persenbeug in Lower Austria was built from 1954 to 1959 and was the first hydroelectric station on the river Danube in Austria.

The two powerhouses (north and south) were equipped with three vertical shaft Kaplan-turbines each having a weir system in the middle and a double ship lock beside. In the 1990's one additional unit was included while the power station was fully operable. The seventh unit is the largest Bulb-turbine installation in Europe with a maximum output of 55 MW and it has all advantages of a state of the art low head installation.

VA TECH HYDRO supplied major parts of the turbine and the generator of this large unit. Today this is a classic example of increasing the efficiency of already existing power plants.

Technical data:
Output: 48.5 MW / 55 MVA
Voltage: 8 kV
Head: 12.1 m
Speed: 75 rpm
Runner diameter: 7,500 mm
Stator diameter: 8,750 mm

Bulb Reference

LAMBACH / Austria

This power station is located on the river Traun near Linz in Upper Austria and features the latest development of VA TECH HYDRO's low head equipment including two Bulbturbine /Generator units of the BULB 2000 design.

The **BULB 2000** is a very efficient solution for low head power stations developed for medium-size power plants with further simplification and reduction of auxiliary equipment including generator cooling system.

For this reason the overall efficiency of the units is very high and the investment cost could be reduced drastically thus offering a very feasible solution for run-off river power stations.

VA TECH HYDRO supplied the entire electro-mechanical equipment including hydraulic steel structures for this plant.

Technical data:
Output: 8 MW / 10 MVA
Voltage: 6.3 kV
Head: 8 m
Speed: 150 rpm
Runner diameter: 3,600 mm
Stator diameter: 4,500 mm

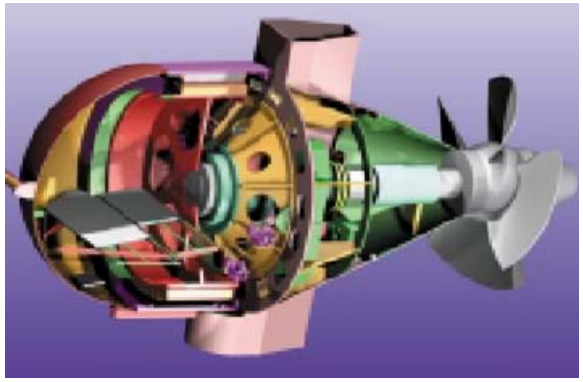

Straflo Reference

WEINZOEDL / Austria

Straflogenerator
Experience
Weinzoedl / Austria

Location: Styria

D_G = 6,660 mm
n = 150 rpm
S = 9.5 MVA
2 units

Contract Year: 1980

ONE OF THE LARGEST STRAFLO-GENERATORS WORLDWIDE!